FLEX

Product Description: Reciprocating Saw
Model Number: FX2271-Z
Body Number: 0780038001
Version: A
Issue Date: 2021/07/15

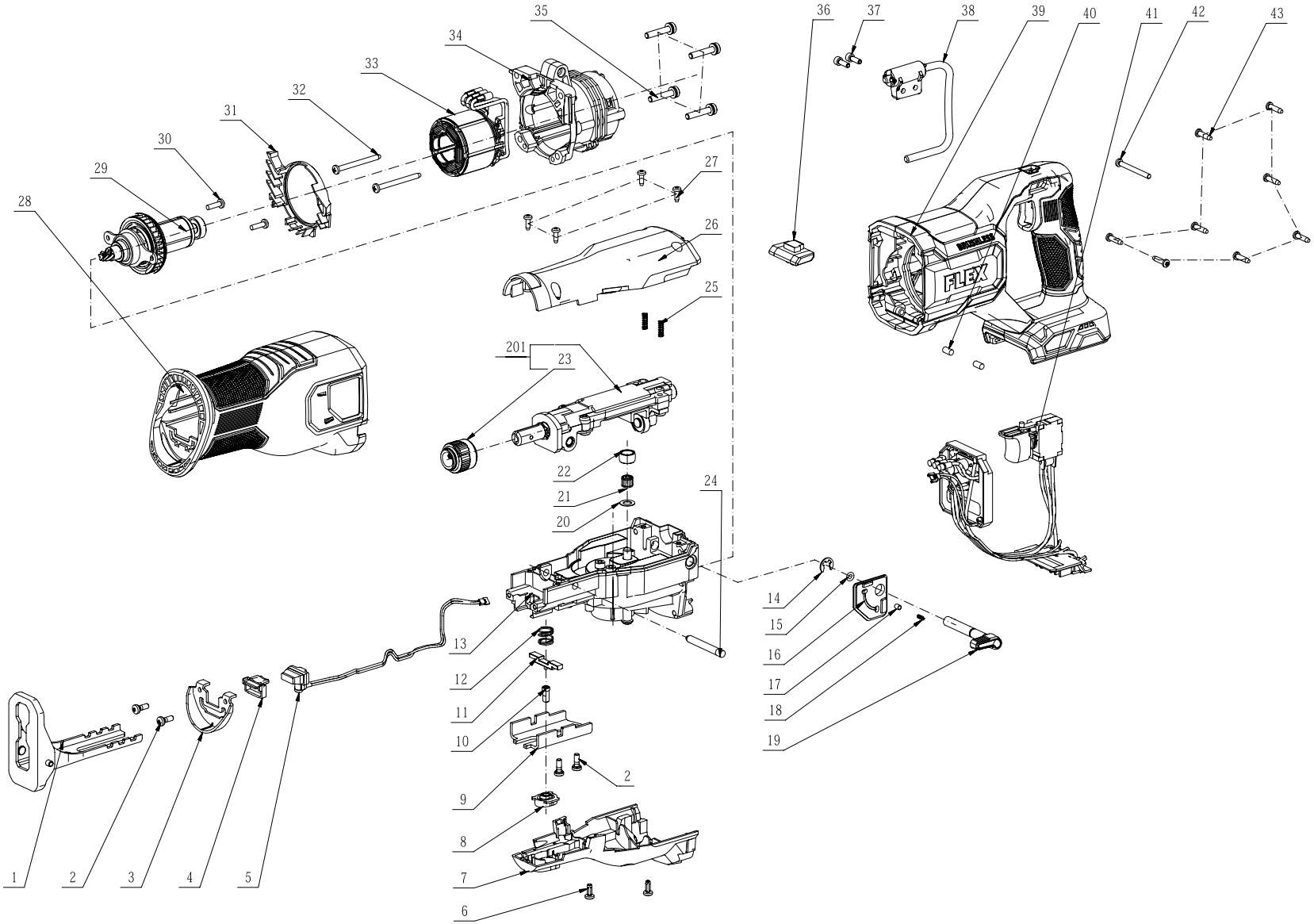

No.	Product Model#	Part Number	Description	Qty
1	FX2271-Z	2827593001	Supporting Assembly	1
2	FX2271-Z	5620361005	Hexagon Lobuar Screw	4
3	FX2271-Z	3705361001	Front Handle Support	1
4	FX2271-Z	3128911001	LED Holder	1
5	FX2271-Z	2830863001	LED Electric Assembly	1
6	FX2271-Z	5610097002	Thread Forming Screw	2
7	FX2271-Z	3131320001	Support	1
8	FX2271-Z	3128619001	Push Button	1
9	FX2271-Z	3707528001	Support Plate	1
10	FX2271-Z	3552674001	Shaft	1
11	FX2271-Z	3520515001	Clamp	1
12	FX2271-Z	3660432001	Spring	1
13	FX2271-Z	2790609001	Gear Case Assembly	1
14	FX2271-Z	5660029001	E Ring	1
15	FX2271-Z	5690018001	O Ring	1
16	FX2271-Z	3131318001	Limit Plate	1
17	FX2271-Z	3704592001	Cap	1
18	FX2271-Z	3660050001	Spring B	1
19	FX2271-Z	3131389001	Pendulum Knob	1
20	FX2271-Z	5650761001	Plain Washer	1
21	FX2271-Z	5700212002	Needle Bearing	1
22	FX2271-Z	3580114001	Crank Roller	1
23	FX2271-Z	2828382001	Quick Clamp Assembly	1
24	FX2271-Z	5670458001	Pin	1
25	FX2271-Z	3660600001	Compression Spring	2
26	FX2271-Z	3131319001	Gear Case Cover	1
27	FX2271-Z	5620164008	Hexagon Socket Screw	4
28	FX2271-Z	3131325001	Front Handle	1
29	FX2271-Z	2751337001	Rotor	1
30	FX2271-Z	5620511003	Hexagon Socket Screw	2
31	FX2271-Z	3131322001	Fan Baffle	1
32	FX2271-Z	5610249001	Tapping Screw	2
33	FX2271-Z	2740337001	Stator Assembly	1
34	FX2271-Z	3131321001	Motor Housing	1
35	FX2271-Z	5610403001	Screw and Washer Assembly	4
36	FX2271-Z	3131387001	Lock Button	1
37	FX2271-Z	5620011010	Hexagon Socket Screw	2
38	FX2271-Z	2827597001	Pothook Assembly	1
39	FX2271-Z	3900372001	L R Handle Set	1
40	FX2271-Z	3123928002	Rubber Pole	2
41	FX2271-Z	2830837001	Electric ASSY	1
42	FX2271-Z	5610285003	Hexagon Tapping Screw	1
43	FX2271-Z	5610294001	Tapping Screw	8
201	FX2271-Z	2827573001	Pendulum Support Assembly	1